CONTROL No: 9153

REV	DATE	ECO	DESCRIPTION	BY	CK	APP
-	10JUL97	N/A	INIT RELEASE	JRO	N/A	N/A

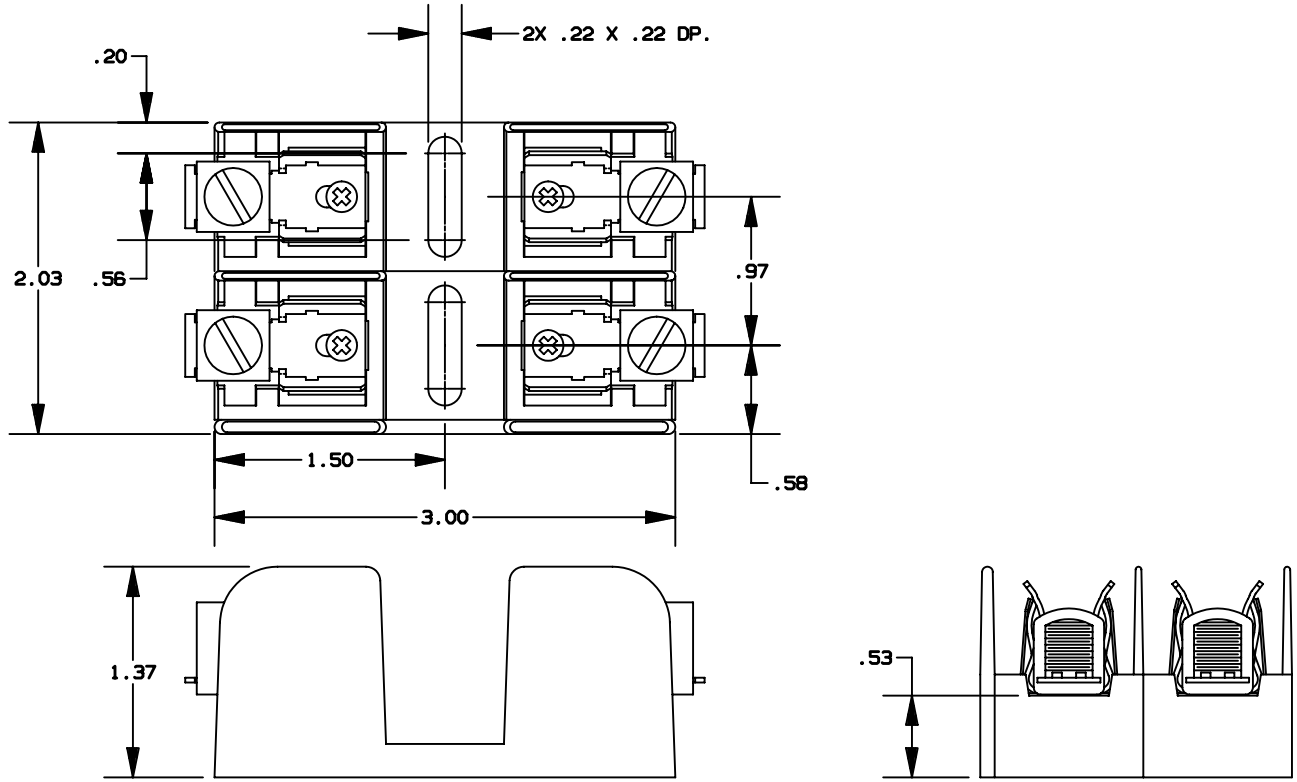

P/N	CONN TYPE	RMS SYM RATING	TORQUE (IN-LBS)	WIRE		U/L		CSA
				°C	TYPE	FILE NO.	GUIDE NO.	REPORT NO.
70357	BOX	200K	35	60/75	CU ONLY	E52283	IZLT2	LR32169

NOTE:

1. TOLERENCES ±.015 UNLESS OTHERWISE SPECIFIED.
2. MATERIAL COMPOSITION AND RATING THERMOPLASTIC-125°C RTI.

Ferraz Shawmut

FERRAZ SHAWMUT INC.
374 MERRIMAC STREET
NEWBURYPORT, MA 01950

PRODUCT MANAGER
SIGN:
DATE:

DESIGN ENGINEER
SIGN:
DATE:

FUSE BLOCK, 750V-30A 2 POLE

OUTLINE DIMENSIONS
NOT TO BE USED FOR PRODUCTION

700295